ภาคผนวก

ลิขสิทธิ์มหาวิทยาลัยเชียงใหม่
Copyright© by Chiang Mai University
All rights reserved

ลิขสิทธิ์ของมหาวิทยาลัยเชียงใหม่ โดย อภิชาติ กันสีนวล
ดาวน์โหลดเมื่อ 18/05/2569 21:19:08 และหมดอายุ 25/10/2569

ภาคผนวก ก

PIC18F2455/2550/4455/4550 Datasheet

ลิขสิทธิ์มหาวิทยาลัยเชียงใหม่
Copyright© by Chiang Mai University
All rights reserved

ลิขสิทธิ์ของมหาวิทยาลัยเชียงใหม่ โดย อภิชาติ กันสีนวล
ดาวน์โหลดเมื่อ 18/05/2569 21:19:08 และหมดอายุ 25/10/2569

28-Pin PDIP, SOIC

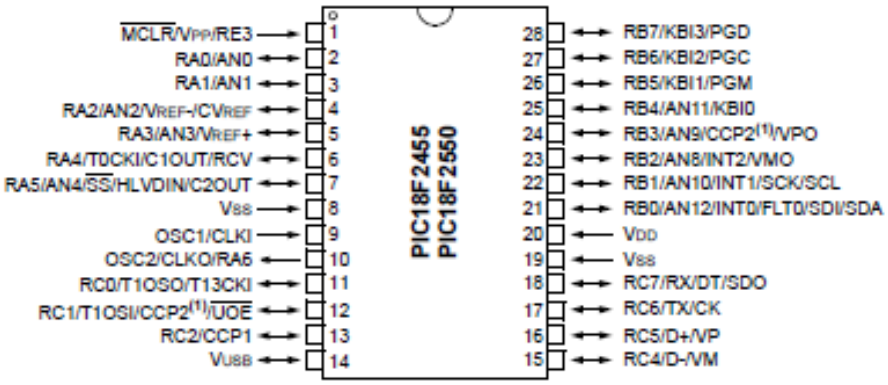

40-Pin PDIP

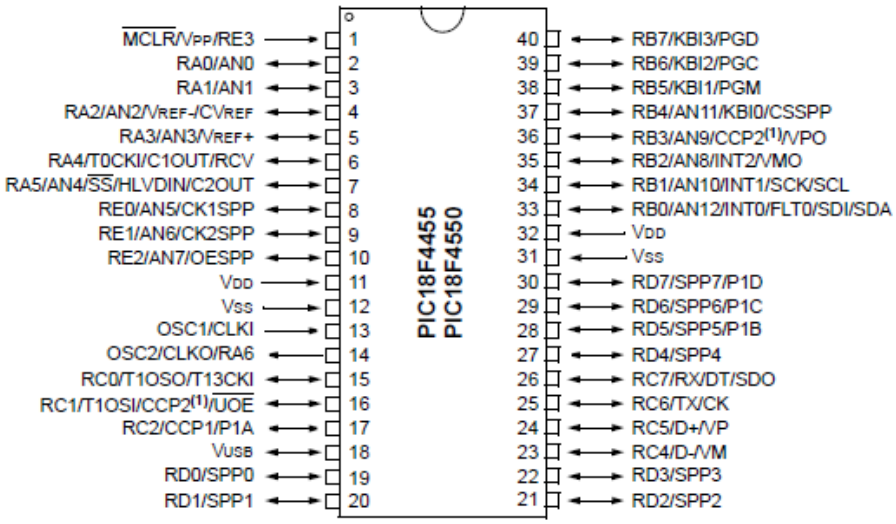

ลิขสิทธิ์มหาวิทยาลัยเชียงใหม่
Copyright© by Chiang Mai University
All rights reserved

ลิขสิทธิ์ของมหาวิทยาลัยเชียงใหม่ โดย อภิชาติ กันสีนวล
ดาวน์โหลดเมื่อ 18/05/2569 21:19:08 และหมดอายุ 25/10/2569

TABLE 1-1: DEVICE FEATURES

Features	PIC18F2455	PIC18F2550	PIC18F4455	PIC18F4550
Operating Frequency	DC – 48 MHz	DC – 48 MHz	DC – 48 MHz	DC – 48 MHz
Program Memory (Bytes)	24576	32768	24576	32768
Program Memory (Instructions)	12288	16384	12288	16384
Data Memory (Bytes)	2048	2048	2048	2048
Data EEPROM Memory (Bytes)	256	256	256	256
Interrupt Sources	19	19	20	20
I/O Ports	Ports A, B, C, (E)	Ports A, B, C, (E)	Ports A, B, C, D, E	Ports A, B, C, D, E
Timers	4	4	4	4
Capture/Compare/PWM Modules	2	2	1	1
Enhanced Capture/ Compare/PWM Modules	0	0	1	1
Serial Communications	MSSP, Enhanced USART	MSSP, Enhanced USART	MSSP, Enhanced USART	MSSP, Enhanced USART
Universal Serial Bus (USB) Module	1	1	1	1
Streaming Parallel Port (SPP)	No	No	Yes	Yes
10-Bit Analog-to-Digital Module	10 Input Channels	10 Input Channels	13 Input Channels	13 Input Channels
Comparators	2	2	2	2
Resets (and Delays)	POR, BOR, RESET Instruction, Stack Full, Stack Underflow (PWRT, OST), MCLR (optional), WDT	POR, BOR, RESET Instruction, Stack Full, Stack Underflow (PWRT, OST), MCLR (optional), WDT	POR, BOR, RESET Instruction, Stack Full, Stack Underflow (PWRT, OST), MCLR (optional), WDT	POR, BOR, RESET Instruction, Stack Full, Stack Underflow (PWRT, OST), MCLR (optional), WDT
Programmable Low-Voltage Detect	Yes	Yes	Yes	Yes
Programmable Brown-out Reset	Yes	Yes	Yes	Yes
Instruction Set	75 Instructions; 83 with Extended Instruction Set enabled	75 Instructions; 83 with Extended Instruction Set enabled	75 Instructions; 83 with Extended Instruction Set enabled	75 Instructions; 83 with Extended Instruction Set enabled
Packages	28-pin PDIP 28-pin SOIC	28-pin PDIP 28-pin SOIC	40-pin PDIP 44-pin QFN 44-pin TQFP	40-pin PDIP 44-pin QFN 44-pin TQFP

ลิขสิทธิ์มหาวิทยาลัยเชียงใหม่
Copyright© by Chiang Mai University
All rights reserved

ลิขสิทธิ์ของมหาวิทยาลัยเชียงใหม่ โดย อภิชาติ กันสีนวล
ดาวน์โหลดเมื่อ 18/05/2569 21:19:08 และหมดอายุ 25/10/2569

FIGURE 1-2: PIC18F4455/4550 (40/44-PIN) BLOCK DIAGRAM

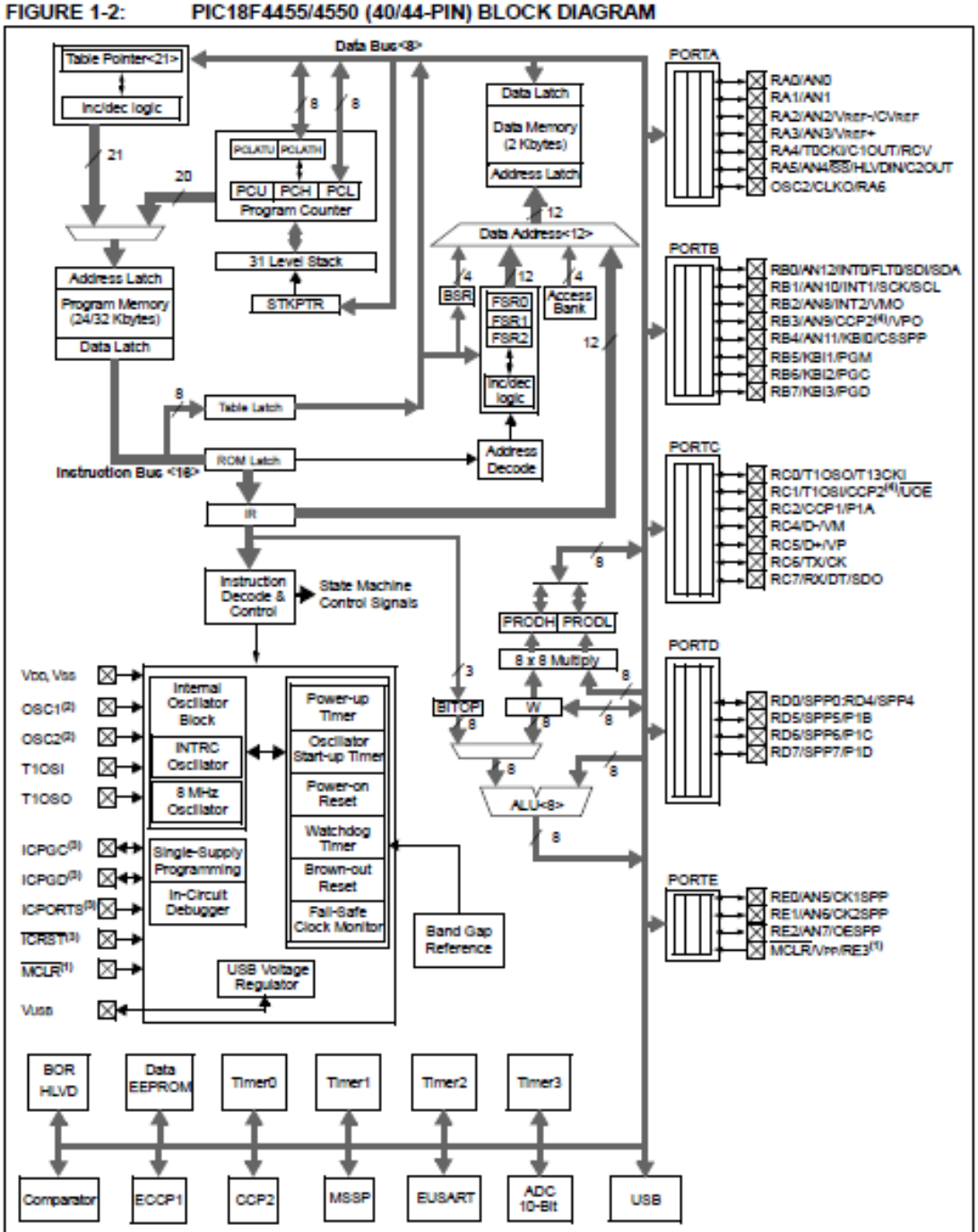

Note 1: RE3 is multiplexed with $\overline{\text{MCLR}}$ and is only available when the $\overline{\text{MCLR}}$ Resets are disabled.

2: OSC1/CLKI and OSC2/CLKO are only available in select oscillator modes and when these pins are not being used as digital I/O. Refer to **Section 2.0 "Oscillator Configurations"** for additional information.

3: These pins are only available on 44-pin TQFP packages under certain conditions. Refer to **Section 26.8 "Special ICPORT Features (Designated Packages Only)"** for additional information.

4: RB3 is the alternate pin for CCP2 multiplexing.

ลิขสิทธิ์ของมหาวิทยาลัยเชียงใหม่ โดย อภิชาติ กันสีนวล
ดาวน์โหลดเมื่อ 18/05/2569 21:19:08 และหมดอายุ 25/10/2569

TABLE 1-3: PIC18F4455/4550 PINOUT I/O DESCRIPTIONS

Pin Name	Pin Number			Pin Type	Buffer Type	Description
	PDIP	QFN	TQFP			
$\overline{MCLR}$/VPP/RE3	1	18	18			Master Clear (input) or programming voltage (input).
$\overline{MCLR}$				I	ST	Master Clear (Reset) input. This pin is an active-low Reset to the device.
VPP				P		Programming voltage input.
RE3				I	ST	Digital input.
OSC1/CLKI	13	32	30			Oscillator crystal or external clock input.
OSC1				I	Analog	Oscillator crystal input or external clock source input.
CLKI				I	Analog	External clock source input. Always associated with pin function OSC1. (See OSC2/CLKO pin.)
OSC2/CLKO/RA6	14	33	31			Oscillator crystal or clock output.
OSC2				O	—	Oscillator crystal output. Connects to crystal or resonator in Crystal Oscillator mode.
CLKO				O	—	In RC mode, OSC2 pin outputs CLKO which has 1/4 the frequency of OSC1 and denotes the instruction cycle rate.
RA6				I/O	TTL	General purpose I/O pin.

Legend: TTL = TTL compatible input; CMOS = CMOS compatible input or output; ST = Schmitt Trigger input with CMOS levels; I = Input; O = Output; P = Power

Note 1: Alternate assignment for CCP2 when CCP2MX Configuration bit is cleared.

2: Default assignment for CCP2 when CCP2MX Configuration bit is set.

3: These pins are No Connect unless the ICPRT Configuration bit is set. For NC/ICPORTS, the pin is No Connect unless ICPRT is set and the $\overline{DEBUG}$ Configuration bit is cleared.

TABLE 1-3: PIC18F4455/4550 PINOUT I/O DESCRIPTIONS (CONTINUED)

Pin Name	Pin Number			Pin Type	Buffer Type	Description
	PDIP	QFN	TQFP			
						PORTA is a bidirectional I/O port.
RA0/AN0	2	19	19			
RA0				I/O	TTL	Digital I/O.
AN0				I	Analog	Analog input 0.
RA1/AN1	3	20	20			
RA1				I/O	TTL	Digital I/O.
AN1				I	Analog	Analog input 1.
RA2/AN2/VREF-/CVREF	4	21	21			
RA2				I/O	TTL	Digital I/O.
AN2				I	Analog	Analog input 2.
VREF-				I	Analog	A/D reference voltage (low) input.
CVREF				O	Analog	Analog comparator reference output.
RA3/AN3/VREF+	5	22	22			
RA3				I/O	TTL	Digital I/O.
AN3				I	Analog	Analog input 3.
VREF+				I	Analog	A/D reference voltage (high) input.
RA4/T0CKI/C1OUT/RCV	6	23	23			
RA4				I/O	ST	Digital I/O.
T0CKI				I	ST	Timer0 external clock input.
C1OUT				O	—	Comparator 1 output.
RCV				I	TTL	External USB transceiver RCV input.
RA5/AN4/$\overline{SS}$/HLVDIN/C2OUT	7	24	24			
RA5				I/O	TTL	Digital I/O.
AN4				I	Analog	Analog input 4.
$\overline{SS}$				I	TTL	SPI slave select input.
HLVDIN				I	Analog	High/Low-Voltage Detect input.
C2OUT				O	—	Comparator 2 output.
RA6	—	—	—	—	—	See the OSC2/CLKO/RA6 pin.

Legend: TTL = TTL compatible input; CMOS = CMOS compatible input or output; ST = Schmitt Trigger input with CMOS levels; I = Input; O = Output; P = Power

Note 1: Alternate assignment for CCP2 when CCP2MX Configuration bit is cleared.

2: Default assignment for CCP2 when CCP2MX Configuration bit is set.

3: These pins are No Connect unless the ICPRT Configuration bit is set. For NC/ICPORTS, the pin is No Connect unless ICPRT is set and the $\overline{DEBUG}$ Configuration bit is cleared.

ลิขสิทธิ์ของมหาวิทยาลัยเชียงใหม่ โดยวิทยาลัยเชียงใหม่
ดาวน์โหลดเมื่อ 18/05/2569 21:19:08 และหมดอายุ 25/10/2569

TABLE 1-3: PIC18F4455/4550 PINOUT I/O DESCRIPTIONS (CONTINUED)

Pin Name	Pin Number			Pin Type	Buffer Type	Description
	PDIP	QFN	TQFP			
						PORTB is a bidirectional I/O port. PORTB can be software programmed for internal weak pull-ups on all inputs.
RB0/AN12/INT0/FLT0/SDI/SDA	33	9	8			
RB0				I/O	TTL	Digital I/O.
AN12				I	Analog	Analog input 12.
INT0				I	ST	External interrupt 0.
FLT0				I	ST	Enhanced PWM Fault input (ECCP1 module).
SDI				I	ST	SPI data in.
SDA				I/O	ST	I^2C™ data I/O.
RB1/AN10/INT1/SCK/SCL	34	10	9			
RB1				I/O	TTL	Digital I/O.
AN10				I	Analog	Analog input 10.
INT1				I	ST	External interrupt 1.
SCK				I/O	ST	Synchronous serial clock input/output for SPI mode.
SCL				I/O	ST	Synchronous serial clock input/output for I^2C mode.
RB2/AN8/INT2/VMO	35	11	10			
RB2				I/O	TTL	Digital I/O.
AN8				I	Analog	Analog input 8.
INT2				I	ST	External interrupt 2.
VMO				O	—	External USB transceiver VMO output.
RB3/AN9/CCP2/VPO	36	12	11			
RB3				I/O	TTL	Digital I/O.
AN9				I	Analog	Analog input 9.
CCP2(1)				I/O	ST	Capture 2 input/Compare 2 output/PWM 2 output.
VPO				O	—	External USB transceiver VPO output.
RB4/AN11/KBI0/CSSPP	37	14	14			
RB4				I/O	TTL	Digital I/O.
AN11				I	Analog	Analog input 11.
KBI0				I	TTL	Interrupt-on-change pin.
CSSPP				O	—	SPP chip select control output.
RB5/KBI1/PGM	38	15	15			
RB5				I/O	TTL	Digital I/O.
KBI1				I	TTL	Interrupt-on-change pin.
PGM				I/O	ST	Low-Voltage ICSP™ Programming enable pin.
RB6/KBI2/PGC	39	16	16			
RB6				I/O	TTL	Digital I/O.
KBI2				I	TTL	Interrupt-on-change pin.
PGC				I/O	ST	In-Circuit Debugger and ICSP programming clock pin.
RB7/KBI3/PGD	40	17	17			
RB7				I/O	TTL	Digital I/O.
KBI3				I	TTL	Interrupt-on-change pin.
PGD				I/O	ST	In-Circuit Debugger and ICSP programming data pin.

Legend: TTL = TTL compatible input; CMOS = CMOS compatible input or output; ST = Schmitt Trigger input with CMOS levels; I = Input; O = Output; P = Power

Note 1: Alternate assignment for CCP2 when CCP2MX Configuration bit is cleared.

2: Default assignment for CCP2 when CCP2MX Configuration bit is set.

3: These pins are No Connect unless the ICPRT Configuration bit is set. For NC/ICPORTS, the pin is No Connect unless ICPRT is set and the $\overline{DEBUG}$ Configuration bit is cleared.

ลิขสิทธิ์ของมหาวิทยาลัยเชียงใหม่ โดย อภิชาติ กันสีนวล
ดาวน์โหลดเมื่อ 18/05/2569 21:19:08 และหมดอายุ 25/10/2569

TABLE 1-3: PIC18F4455/4550 PINOUT I/O DESCRIPTIONS (CONTINUED)

Pin Name	Pin Number			Pin Type	Buffer Type	Description
	PDIP	QFN	TQFP			
						PORTC is a bidirectional I/O port.
RC0/T1OSO/T13CKI	15	34	32			
RC0				I/O	ST	Digital I/O.
T1OSO				O	—	Timer1 oscillator output.
T13CKI				I	ST	Timer1/Timer3 external clock input.
RC1/T1OSI/CCP2/UOE	16	35	35			
RC1				I/O	ST	Digital I/O.
T1OSI				I	CMOS	Timer1 oscillator input.
CCP2(2)				I/O	ST	Capture 2 input/Compare 2 output/PWM 2 output.
UOE				O	—	External USB transceiver $\overline{OE}$ output.
RC2/CCP1/P1A	17	36	36			
RC2				I/O	ST	Digital I/O.
CCP1				I/O	ST	Capture 1 input/Compare 1 output/PWM 1 output.
P1A				O	TTL	Enhanced CCP1 PWM output, channel A.
RC4/D-/VM	23	42	42			
RC4				I	TTL	Digital input.
D-				I/O	—	USB differential minus line (input/output).
VM				I	TTL	External USB transceiver VM input.
RC5/D+/VP	24	43	43			
RC5				I	TTL	Digital input.
D+				I/O	—	USB differential plus line (input/output).
VP				I	TTL	External USB transceiver VP input.
RC6/TX/CK	25	44	44			
RC6				I/O	ST	Digital I/O.
TX				O	—	EUSART asynchronous transmit.
CK				I/O	ST	EUSART synchronous clock (see RX/DT).
RC7/RX/DT/SDO	26	1	1			
RC7				I/O	ST	Digital I/O.
RX				I	ST	EUSART asynchronous receive.
DT				I/O	ST	EUSART synchronous data (see TX/CK).
SDO				O	—	SPI data out.

Legend: TTL = TTL compatible input; CMOS = CMOS compatible input or output; ST = Schmitt Trigger input with CMOS levels; I = Input; O = Output; P = Power

Note 1: Alternate assignment for CCP2 when CCP2MX Configuration bit is cleared.

2: Default assignment for CCP2 when CCP2MX Configuration bit is set.

3: These pins are No Connect unless the ICPRT Configuration bit is set. For NC/ICPORTS, the pin is No Connect unless ICPRT is set and the $\overline{DEBUG}$ Configuration bit is cleared.

ลิขสิทธิ์มหาวิทยาลัยเชียงใหม่
Copyright© by Chiang Mai University
All rights reserved

ลิขสิทธิ์ของมหาวิทยาลัยเชียงใหม่ โดย อภิชาติ กันสีนวล
ดาวน์โหลดเมื่อ 18/05/2569 21:19:08 และหมดอายุ 25/10/2569

TABLE 1-3: PIC18F4455/4550 PINOUT I/O DESCRIPTIONS (CONTINUED)

Pin Name	Pin Number			Pin Type	Buffer Type	Description
	PDIP	QFN	TQFP			
						PORTD is a bidirectional I/O port or a Streaming Parallel Port (SPP). These pins have TTL input buffers when the SPP module is enabled.
RD0/SPP0	19	38	38			
RD0				I/O	ST	Digital I/O.
SPP0				I/O	TTL	Streaming Parallel Port data.
RD1/SPP1	20	39	39			
RD1				I/O	ST	Digital I/O.
SPP1				I/O	TTL	Streaming Parallel Port data.
RD2/SPP2	21	40	40			
RD2				I/O	ST	Digital I/O.
SPP2				I/O	TTL	Streaming Parallel Port data.
RD3/SPP3	22	41	41			
RD3				I/O	ST	Digital I/O.
SPP3				I/O	TTL	Streaming Parallel Port data.
RD4/SPP4	27	2	2			
RD4				I/O	ST	Digital I/O.
SPP4				I/O	TTL	Streaming Parallel Port data.
RD5/SPP5/P1B	28	3	3			
RD5				I/O	ST	Digital I/O.
SPP5				I/O	TTL	Streaming Parallel Port data.
P1B				O	—	Enhanced CCP1 PWM output, channel B.
RD6/SPP6/P1C	29	4	4			
RD6				I/O	ST	Digital I/O.
SPP6				I/O	TTL	Streaming Parallel Port data.
P1C				O	—	Enhanced CCP1 PWM output, channel C.
RD7/SPP7/P1D	30	5	5			
RD7				I/O	ST	Digital I/O.
SPP7				I/O	TTL	Streaming Parallel Port data.
P1D				O	—	Enhanced CCP1 PWM output, channel D.

Legend: TTL = TTL compatible input; CMOS = CMOS compatible input or output; ST = Schmitt Trigger input with CMOS levels; I = Input; O = Output; P = Power

Note 1: Alternate assignment for CCP2 when CCP2MX Configuration bit is cleared.

2: Default assignment for CCP2 when CCP2MX Configuration bit is set.

3: These pins are No Connect unless the ICPRT Configuration bit is set. For NC/ICPORTS, the pin is No Connect unless ICPRT is set and the $\overline{\text{DEBUG}}$ Configuration bit is cleared.

ลิขสิทธิ์มหาวิทยาลัยเชียงใหม่
Copyright© by Chiang Mai University
All rights reserved

ลิขสิทธิ์ของมหาวิทยาลัยเชียงใหม่ โดย อภิชาติ กันสีนวล
ดาวน์โหลดเมื่อ 18/05/2569 21:19:08 และหมดอายุ 25/10/2569

SIM900 Datasheet

SIM900
GSM/GPRS Module

The SIM900 is a complete Quad-band GSM/GPRS solution in a SMT module which can be embedded in the customer applications.

Featuring an industry-standard interface, the SIM900 delivers GSM/GPRS 850/900/1800/1900MHz performance for voice, SMS, Data, and Fax in a small form factor and with low power consumption. With a tiny configuration of 24mm x 24mm x 3 mm, SIM900 can fit almost all the space requirements in your M2M application, especially for slim and compact demand of design.

- SIM900 is designed with a very powerful single-chip processor integrating AMR926EJ-S core
- Quad - band GSM/GPRS module with a size of 24mmx24mmx3mm
- SMT type suit for customer application
- An embedded Powerful TCP/IP protocol stack
- Based upon mature and field-proven platform, backed up by our support service, from definition to design and production

ลิขสิทธิ์ของมหาวิทยาลัยเชียงใหม่ โดย อภิชาติ กันสีนวล
ดาวน์โหลดเมื่อ 18/05/2569 21:19:08 และหมดอายุ 25/10/2569

General featrues

- Quad-Band 850/ 900/ 1800/ 1900 MHz
- GPRS multi-slot class 10/8
- GPRS mobile station class B
- Compliant to GSM phase 2/2+
  – Class 4 (2 W @850/ 900 MHz)
  – Class 1 (1 W @ 1800/1900MHz)
- Dimensions: 24* 24 * 3 mm
- Weight: 3.4g
- Control via AT commands (GSM 07.07 ,07.05 and SIMCOM enhanced AT Commands)
- SIM application toolkit
- Supply voltage range 3.4 ... 4.5 V
- Low power consumption
- Operation temperature: -30 °C to +80 °C

Specifications for fax

- Group 3, class 1

Specifications for data

- GPRS class 10: max. 85.6 kbps (downlink)
- PBCCH support
- Coding schemes CS 1, 2, 3, 4
- CSD up to 14.4 kbps
- USSD
- Non transparent mode
- PPP-stack

Specifications for SMS via GSM / GPRS

- Point-to-point MO and MT
- SMS cell broadcast
- Text and PDU mode

Drivers

- MUX Driver

Specifications for voice

- Tricodec
  – Half rate (HR)
  – Full rate (FR)
  – Enhanced Full rate (EFR)
- Hands-free operation (Echo suppression)
- AMR
  Half Rate(HR)
  Full Rate(FR)

Interfaces

- Interface to external SIM 3V/ 1.8V
- analog audio interface
- RTC backup
- SPI interface
- Serial interface
- Antenna pad
- I2C
- GPIO
- PWM
- ADC

Compatibility

- AT cellular command interface

Approvals（in planning）

- CE
- FCC
- ROHS
- PTCRB
- GCF
- AT&T
- IC
- TA

Pin Assignment

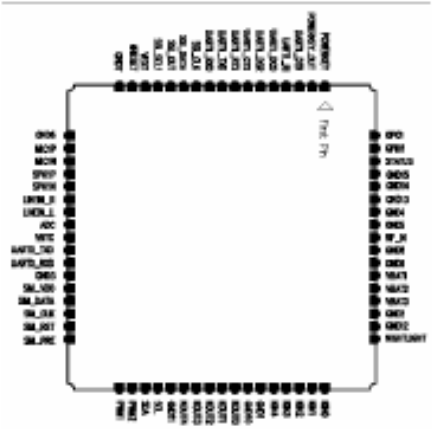

More about SIM900 module, Please contact: Tel:+86 21 32523300
Fax:+86 21 32523301
Email:simcom@sim.com

ลิขสิทธิ์ของมหาวิทยาลัยเชียงใหม่ โดย อภิชาติ กันสีนวล
ดาวน์โหลดเมื่อ 18/05/2569 21:19:08 และหมดอายุ 25/10/2569

Weather Sensor Assembly p/n 80422 Datasheet

Weather Sensor Assembly p/n 80422

Imported by Argent Data Systems

Usage Notes

This kit includes a wind vane, cup anemometer, and tipping bucket rain gauge, with associated mounting hardware. These sensors contain no active electronics, instead using sealed magnetic reed switches and magnets to take measurements. A voltage must be supplied to each instrument to produce an output.

Assembly

The wind sensor arm mounts on top of the two-piece metal mast and supports the wind vane and anemometer. A short cable connects the two wind sensors. Plastic clips on the underside of the arm hold this cable in place. Screws are provided to secure the sensors to the arm.

The rain gauge may be mounted lower on the mast using its own mounting arm and screw, or it may be mounted independently.

Rain Gauge

The rain gauge is a self-emptying tipping bucket type. Each 0.011" (0.2794 mm) of rain causes one momentary contact closure that can be recorded with a digital counter or microcontroller interrupt input. The gauge's switch is connected to the two center conductors of the attached RJ11-terminated cable.

Anemometer

The cup-type anemometer measures wind speed by closing a contact as a magnet moves past a switch. A wind speed of 1.492 MPH (2.4 km/h) causes the switch to close once per second.

The anemometer switch is connected to the inner two conductors of the RJ11 cable shared by the anemometer and wind vane (pins 2 and 3.)

ลิขสิทธิ์ของมหาวิทยาลัยเชียงใหม่ โดย อดิศาต ณ ศรีนวล
ดาวน์โหลดเมื่อ 18/05/2569 21:19:08 และหมดอายุ 25/10/2569

Wind Vane

The wind vane is the most complicated of the three sensors. It has eight switches, each connected to a different resistor. The vane's magnet may close two switches at once, allowing up to 16 different positions to be indicated. An external resistor can be used to form a voltage divider, producing a voltage output that can be measured with an analog to digital converter, as shown below.

The switch and resistor arrangement is shown in the diagram to the right. Resistance values for all 16 possible positions are given in the table.

Resistance values for positions between those shown in the diagram are the result of two adjacent resistors connected in parallel when the vane's magnet activates two switches simultaneously.

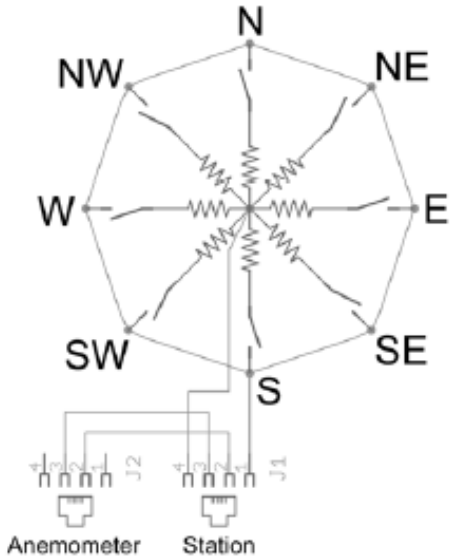

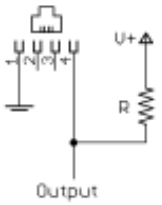

Example wind vane interface circuit. Voltage readings for a 5 volt supply and a resistor value of 10k ohms are given in the table.

Direction (Degrees)	Resistance (Ohms)	Voltage (V=5v, R=10k)
0	33k	3.84v
22.5	6.57k	1.98v
45	8.2k	2.25v
67.5	891	0.41v
90	1k	0.45v
112.5	688	0.32v
135	2.2k	0.90v
157.5	1.41k	0.62v
180	3.9k	1.40v
202.5	3.14k	1.19v
225	16k	3.08v
247.5	14.12k	2.93v
270	120k	4.62v
292.5	42.12k	4.04v
315	64.9k	4.78v
337.5	21.88k	3.43v

ลิขสิทธิ์ของมหาวิทยาลัยเชียงใหม่ โดย อภิชาติ กันสีนวล
ดาวน์โหลดเมื่อ 18/05/2569 21:19:08 และหมดอายุ 25/10/2569

ประวัติผู้เขียน

ชื่อ-นามสกุล นายจตุรัฐ คำขาว

วัน เดือน ปี เกิด 2 กุมภาพันธ์ พ.ศ. 2527

ประวัติการศึกษา ปีการศึกษา 2549 ปริญญาวิศวกรรมศาสตรบัณฑิต
สาขาวิศวกรรมคอมพิวเตอร์ มหาวิทยาลัยนเรศวร

ลิขสิทธิ์มหาวิทยาลัยเชียงใหม่
Copyright© by Chiang Mai University
All rights reserved

ลิขสิทธิ์ของมหาวิทยาลัยเชียงใหม่ โดย อภิชาติ กันสีนวล
ดาวน์โหลดเมื่อ 18/05/2569 21:19:08 และหมดอายุ 25/10/2569